City and County of San Francisco
2030 Sewer System Master Plan

TASK 400
TECHNICAL MEMORANDUM NO. 407
REGULATORY CONSIDERATIONS FOR OCEANSIDE DISCHARGES

FINAL DRAFT
August 2009

2700 YGNACIO VALLEY ROAD • SUITE 300 • WALNUT CREEK, CALIFORNIA 94598 • (925) 932-1710 • FAX (925) 930-0208

CITY AND COUNTY OF SAN FRANCISCO
SEWER SYSTEM MASTER PLAN

TASK 400

TECHNICAL MEMORANDUM
NO. 407
REGULATORY CONSIDERATIONS FOR OCEANSIDE DISCHARGES

TABLE OF CONTENTS

Page No.

1.0 INTRODUCTION 407-1

2.0 DRY WEATHER AND WET WEATHER OCEANSIDE FLOW CONDITIONS 407-1

3.0 DRY WEATHER OCEANSIDE DISCHARGE REQUIREMENTS 407-2

4.0 WET-WEATHER DISCHARGE REQUIREMENTS 407-3

5.0 OCEANSIDE FUTURE REGULATORY CONSIDERATIONS AND TRENDS 407-6
- 5.1 Dry Weather Oceanside Pollutants of Concern 407-7
- 5.2 Longer-term Oceanside Pollutants of Concern Considerations..... 407-7
- 5.3 Oceanside 303(d) List and TMDLs 407-8
- 5.4 Dilution Credits for Dry Weather Oceanside Discharges..... 407-8
- 5.5 Disinfection of Oceanside Flows 407-8
- 5.6 Monterey Bay National Marine Sanctuary - Exclusion Zone 407-9
- 5.7 Renewal of Ocean Plan Exception for Wet Weather Discharges 407-9

6.0 POTENTIAL REGULATORY SCENARIOS..... 407-11
- 6.1 Oceanside Regulatory Scenario Through 2020..... 407-11
- 6.2 Oceanside Regulatory Scenario Through 2040..... 407-12

LIST OF APPENDICES

A - Combined Sewer Discharges
B - Oceanside Pollutants of Concern
C - Oceanside Dilution Factors
D - Disinfection of Dry Weather Oceanside Flows

LIST OF TABLES

Table 1 Treatment and Discharge Locations of Dry and Wet Weather Flows on the Westside 407-2
Table 2 Federal, State, and Regional Requirements Governing Oceanside Effluent Quality 407-2
Table 3 Oceanside Waste Pollution Control Plant Dry Weather Discharge Requirements 407-4

REGULATORY CONSIDERATIONS FOR OCEANSIDE DISCHARGES

1.0 INTRODUCTION

San Francisco's combined wastewater and stormwater system has both off-shore and near-shore discharge locations in the Pacific Ocean and San Francisco Bay. Different regulations are applicable to discharges into the Pacific Ocean, a fully marine environment, than into the San Francisco Bay, an estuarine environment. Consequently, two separate NPDES permits regulate these discharges. The purpose of this TM is to review the conditions and permit limitations pertaining to Oceanside discharge, as well as pertinent regulatory trends and potential regulatory developments that could affect the master planning process.

2.0 DRY WEATHER AND WET WEATHER OCEANSIDE FLOW CONDITIONS

San Francisco's wastewater and stormwater that flow naturally towards the Pacific Ocean are collected and treated through the Oceanside collection and treatment system. The current average dry weather flow on the Oceanside is 17.2 mgd. Dry weather Oceanside flows receive secondary treatment at the Oceanside Waste Pollution Control Plant (Oceanside Treatment Plant) and are then discharged into the Pacific Ocean through the Southwest Ocean Outfall (SWOO), a 4.5 mile outfall. The discharge is not disinfected.

In terms of permit compliance, flows of greater than 43 mgd are considered wet weather discharges. During wet weather, the Oceanside Treatment Plant no longer operates as a POTW, but rather as a wet weather treatment facility. Wet weather flows of greater than 43 mgd and less than 65 MGD receive primary treatment at the Oceanside Treatment Plant and are discharged through the SWOO.

When the treatment capacity of the Oceanside Treatment Plant is reached at 65 mgd, wet weather flows receive settleable solids and floatables removal in the Westside storage/transport system. Flows are discharged through the SWOO until they reach 175 mgd. Any excess wet weather flows above 175 mgd receive treatment in the storage/transport system yet are discharged from active combined sewer discharge (CSD) near-shore discharge locations CSD 001 through CSD 008 (Appendix A). The levels of treatment and discharge locations associated with different flows are listed in Table 1.

Table 1	Treatment and Discharge Locations of Dry and Wet Weather Flows on the Westside 2030 Sewer System Master Plan City and County of San Francisco		
Dry / Wet Weather	**Flow, Q**	**Treatment**	**Location of Discharge**
Dry Weather	Q < 43mgd	Secondary treatment	SWOO deep water ocean outfall
Wet Weather	43 < Q < 65 mgd	Primary treatment	SWOO deep water ocean outfall
Wet Weather	65 < Q < 175 mgd	Settleable solids and floatables removal	SWOO deep water ocean outfall
Wet Weather	Q > 175 mgd	Settleable solids and floatables removal	Near-shore active CSD outfalls: CSD 001 - CSD 8

3.0 DRY WEATHER OCEANSIDE DISCHARGE REQUIREMENTS

Both wet and dry weather discharges are regulated by the Oceanside Treatment Plant NPDES Permit No. CA0037681, adopted August 12, 2009 (Order No. R2-2009-0062). The SWOO pipeline extends beyond the 3-mile limit of state waters and discharges into federal waters. Consequently, discharges through SWOO are regulated by the US EPA. US EPA has historically relied on the California Ocean Plan for guidance. Wet-weather flows are governed by the CSO Control Policy. A summary of the federal, state, and regional regulations applicable to San Francisco's Oceanside dry weather discharges is presented in Table 2.

Table 2	Federal, State, and Regional Requirements Governing Oceanside Effluent Quality 2030 Sewer System Master Plan City and County of San Francisco
	Receiving Water/Water Quality
Federal	Clean Water Act (CWA) National Pollutant Discharge Elimination System (NPDES) Water Quality Standards Regulations Section 303(d) and TMDL Process Combined Sewer Overflow (CSO) Policy
State	Porter-Cologne Water Quality Act California Ocean Plan (used as guidance for discharges into federal waters)

The beneficial uses outlined in the Ocean Plan and applied to Oceanside discharges include the following:

- Industrial water supply
- Water contact and non-contact recreation, including aesthetic enjoyment
- Navigation
- Commercial and sport fishing
- Mariculture
- Preservation and enhancement of designated Areas of Special Biological Significance
- Rare and endangered species
- Marine habitat
- Fish migration
- Fish spawning and shellfish harvesting

Water quality objectives for pollutants have been established in the California Ocean Plan to protect these beneficial uses. If a discharge is found to have reasonable potential to exceed any of these objectives, then permit limits are included for that pollutant in the discharge permit. In order to determine reasonable potential, a Reasonable Potential Analysis (RPA) is conducted using historical data and statistical methods outlined in the California Ocean Plan.

Permit requirements for San Francisco's Oceanside dry weather effluent discharges are summarized in Table 3.

Additional dry weather requirements include the following:

- **Percent Removal:** The average monthly percent removal of BOD_5 @20°C and TSS shall not be less than 85 percent.

4.0 WET-WEATHER DISCHARGE REQUIREMENTS

During wet-weather, San Francisco's combined system collects, stores, and treats all stormwater runoff, except for a few areas within the City which have a separate stormwater system. All wet-weather discharges within the combined system must comply with requirements of EPA's CSO Control Policy. Separate stormwater areas must comply with the requirements outlined in their Municipal Separate Storm Sewer System (MS4) permits.

Table 3	Oceanside Waste Pollution Control Plant Dry Weather Discharge Requirements Name of Project Name of Client				
Constituent	**Units**	**Monthly Average**	**Weekly Average**	**Daily Maximum**	**Instantaneous Maximum**
5-day Biochemical Oxygen Demand (BOD_5)	mg/L	30	45		
Total Suspended Solids (TSS)	mg/L	30	45		
pH (1)	std units		9.0	6.0	9.0
Chronic Toxicity	TUc			76	
Mercury	ug/L			24	

Note:
(1) The pH effluent limit of 6.0 shall not apply if the discharger can demonstrate that the addition of inorganic chemicals or industrial sources is not causing the excursion below 6.0. The regulations at 40 CFR 133.102(c) allow the modification or elimination of pH limitations when it can be demonstrated that the addition of inorganic chemicals or industrial sources is not causing an excursion above or below the limits.

For combined flows, the CSO Policy outlines a phased approach when implementing its requirements. The first phase requires that dischargers meet the Nine Minimum Controls and develop a Long-Term Control Plan to meet the goals of the CWA. The second phase is to implement the controls outlined in the Long-Term Control Plan. The Nine Minimum Controls, as outlined in the CSO Control Policy are the following:

1. Conduct proper operation and regular maintenance programs for the combined sewer system and CSO outfalls:

2. Maximize use of the collection system for storage;

3. Review and modify pretreatment programs to ensure that CSO impacts are minimized;

4. Maximize flow to the POTW for treatment;

5. Prohibit CSOs during dry weather;

6. Control solids and floatable materials in CSOs;

7. Develop and implement pollution prevention programs that focus on containment reduction activities;

8. Notify the public to ensure that the public receives adequate notification of CSO discharges and their impacts;

9. Monitor to effectively characterize CSO impacts and the efficacy of CSO controls.

San Francisco has completed Phase I by implementing the Nine Minimum Controls and completing its Long-Term Control Plan. The Long-Term Control Plan was completed as part of the 1974 Sewer Master Plan. The system was designed to capture, store, and treat all combined flows with a long-term rainfall average frequency protective of beneficial uses. The fully operational storage/transport system surrounds the City's perimeter in order to collect and treat the City's stormwater runoff before reaching shoreline waters. During wet weather, combined sewer and stormwater effluent from the storage/transport systems can overflow to the Pacific Ocean through a number of CSD locations along the shore, (active CSD discharge CSD 001 through CSD 008, see Appendix A). Based on 70 years of historical rainfall data, a long term average of eight overflows was found to provide adequate overall protection of beneficial uses.

The CSO Control Policy outlines two approaches for showing compliance with Phase II. The first is the "Presumption" Approach and the second is the "Demonstration" Approach. The "Presumption" approach states that a program that meets any of the criteria listed below would be presumed to meet the water quality-based requirements of the CWA. The criteria to meet the Presumption approach outlined in the CSO Control Policy include the following:

1. No more than an average of four overflow events per year, provided that the permitting authority may allow up to two additional overflow events per year. For the purpose of this criterion, an overflow event is one or more overflows from a combined sewer system as the result of a precipitation event that does not receive the minimum treatment specified below; or
2. The elimination or the capture for treatment of no less than 85% by volume of the combined sewage collected in the combined sewer system during precipitation events on a system-wide annual average basis; or
3. The elimination or removal of no less than the mass of the pollutants identified as causing water quality impairment through the sewer system characterization, monitoring, and modeling effort, for the volumes that would be eliminated or captured for treatment under paragraph 2 above.

Combined sewer flows remaining after implementation of the nine minimum controls and within the criteria specified in paragraphs i or ii, should receive a minimum of;

- Primary clarification (Removal of floatables and settleable solids may be achieved by any combination of treatment technologies or methods that are shown to be equivalent to primary clarification.);
- Solids and floatables disposal; and

- Disinfection of effluent, if necessary, to meet water quality standards, protect designated uses, and protect human health, including removal of disinfection chemical residuals, where necessary. (CSO Control Policy)

The “Demonstration” approach requires that the CSO control program, though not meeting the requirements of the “Presumption” approach, may be adequate to meet the water quality based requirements of the CWA if it is demonstrated that water quality standards are met and designated uses are protected.

According to the RWQWB in Oceanside’s latest permit, the RWQCB has determined that San Francisco’s program, which continues to implement its Long-Term Control Plan, is consistent with the CSO Control Policy. More specifically, the permit states:

> The CSODs [combined sewer overflow discharges] are consistent with the requirements of the Presumptive Approach because the Discharger captures and provides treatment to 100 percent of the combined sewer flow, which is greater than the minimum treatment requirement of 85 percent specified under the Presumptive Approach, and results in zero untreated CSOs per year. The effluent is not disinfected because State Water Board Order No. 79-16 concluded that allowing an average of eight CSODs per year from Ocean Plan requirements would serve the public interest and would not compromise beneficial uses of the receiving waters.

On March 23, 1979 the State Board adopted Order 79-16, which gives the Oceanside combined sewer discharges an exception from terms in the Ocean Plan. The USEPA approved the exception on August 17, 1979 finding that as designed, the near-shore discharge CSDs would not compromise beneficial uses.

The CSO Control Policy states that combined sewer and storm water discharges must meet water quality objectives and protect beneficial uses. There are no water quality objectives specific to wet weather that exists currently. In the future, wet weather water quality objectives or something similar may be applied, or wet weather discharges may have to meet existing water quality objectives

5.0 OCEANSIDE FUTURE REGULATORY CONSIDERATIONS AND TRENDS

This section provides insight into future regulatory considerations that may impact how San Francisco will need to manage wastewater and stormwater discharges over the course of the master planning horizon.

Identifying future regulatory trends is a key component in developing master plan alternatives. Identifying future regulatory trends now will allow major design and budgeting

considerations that may be required in the future to be planned for. For example, identifying future pollutants of concern, such as metals, nutrients, and/or pathogens, allows for the master planning alternatives to consider adding flexibility to add treatment options that address these concerns (such as allowing space in a new treatment plant site's layout for filtration, nitrification, or disinfection).

5.1 Dry Weather Oceanside Pollutants of Concern

In the 2009 permit renewal, mercury was found to have reasonable potential on the Oceanside. It is anticipated that the discharge will be able to meet the new mercury limit. Additionally, even though there was no reasonable potential found, EPA still included limitations for chronic toxicity based on best professional judgment.

Since the discharge from the Oceanside Treatment Plant is carried by the outfall into federal waters (i.e., beyond the 3-mile limit), US EPA has discretion as to what method it will use to determine reasonable potential of the effluent to cause exceedances of water quality standards. In the past, the method outlined in *EPA's Technical Support Document for Water Quality-based Toxics Control* (TSD) has been used. EPA now uses the newly developed method outlined in the Ocean Plan. In either method, dilution is considered before determining reasonable potential.

A more detailed explanation of the how the RPA analysis was conducted (i.e. methodology, data) is presented in the Appendix B (Pollutants of Concern for Oceanside Discharges).

5.2 Longer-term Oceanside Pollutants of Concern Considerations

Water quality standards may be updated in the future, resulting in more stringent requirements and adding to the list of pollutants of concern over the longer master-planning horizon. The following are objectives that EPA has developed, yet have not been incorporated into the California Ocean Plan.

- **Nonylphenol** - On February 23, 2006, EPA published final recommended aquatic life ambient water quality criteria for nonylphenol. The new saltwater criteria are the same for both acute and chronic toxicity, 0.83 ug/L. Nonylphenol is a byproduct of nonylphenol ethoxylates, which are used in industrial detergents and residential products. Nonylphenol is an endocrine disrupting chemical that has been found at low levels in wastewater effluents. San Francisco's effluents are not typically tested for nonylphenol.

- **Diazinon** - On February 23, 2006, the EPA published final recommended aquatic life ambient water quality criteria for diazinon, an organophosphate pesticide. The new saltwater criteria are 6.7 ug/L for acute toxicity and 1.4 ug/L for chronic toxicity. In 2000, EPA banned indoor use of diazinon and phased-out its use on outdoor lawns and garden applications. In the diazinon data collected from September 2003 through

December 2004 from the Southeast Plant effluent, all samples (5) were below detection levels (0.04 ug/L – 0.5 ug/L). As of October 2007, the Oceanside Plant had not been sampled for diazinon.

Based on best professional judgment, EPA may use these recommended water quality criteria when considering reasonable potential prior to their inclusion in the Ocean Plan. At a minimum, monitoring requirements for these parameters will likely eventually be required.

5.3 Oceanside 303(d) List and TMDLs

The Pacific Ocean has not been identified as impaired and is therefore not included on the 303(d) list. The EPA has added a near-shore beach, Baker Beach, to the 2006 303(d) list for “Bacteria Indicators”, although no discharge is located in the vicinity of the listed area.

5.4 Dilution Credits for Dry Weather Oceanside Discharges

When determining reasonable potential and calculating WQBELs for the 2009 permit, dry-weather discharges from the SWOO were granted a dilution credit of 150:1. This is an increase from the previous allowance of 76:1. In order to get this increase in dilution, San Francisco presented results from models and dye studies which found that dilution was much greater than 76:1. Additional information regarding dilution credits for the Oceanside discharge can be found in the Appendix C.

5.5 Disinfection of Oceanside Flows

Currently, Oceanside discharges are not disinfected. Receiving water studies have found that discharges from the SWOO do not flow back near-shore, and therefore have no impact on shoreline recreational uses. Weekly monitoring data support this finding year after year. Consequently, the RWQCB adopted order No. 89-71 on May 17, 1989 which deleted the disinfection requirement.

In more recent history, concerns regarding impacts to marine mammals from bacteria in stormwater and sewage have been raised. Additionally, the National Resource Defense Council (NRDC) sued EPA for not revising the “outdated” beachwater quality standards required by the Beach Act passed by Congress in 2000. As a result, EPA is moving forward with developing an improved public health standard and approving faster test methods. Changing the beach water quality standards is not likely to impact the SWOO discharge since the discharged flows are not carried to near-shore waters.

Additional research may be required to discern if mammalian impacts exist due to discharges from the SWOO or near-shore combined sewer discharges. Disinfection of the Oceanside discharges may be required in the future in order to address these concerns. Additional information regarding the disinfection of Oceanside flows is presented in the Appendix D (Disinfection of Oceanside Dry Weather Discharges).

5.6 Monterey Bay National Marine Sanctuary - Exclusion Zone

The Monterey Bay and surrounding waters off the California central coast were designated a national marine sanctuary by the National Oceanic and Atmospheric Administration (NOAA) in 1992. The Monterey Bay Marine Sanctuary runs from Point Bonita in the north (Marin corners to Point Conception in the south (San Luis Obispo corners)), with exception of the San Francisco-Pacifica Exclusion Zone ("Exclusion Zone"), a small area off-shore of San Francisco Bay extending to San Mateo and Marin counties. The SWOO is located within the Exclusion Zone.

The Exclusion Zone to the Marine Sanctuary boundaries may be revisited by Monterey Bay Marine Sanctuary Water Quality Protection Program staff in the future. A Memorandum of Agreement between NOAA, US EPA, State Water Board, and the SF RWQCB (among others) allows NOAA to review all permits for discharge into the Sanctuary. Regulations establishing the Sanctuary require all discharges into the Sanctuary to treat to secondary standards or greater. If the Exclusion Zone were to be eliminated, and San Francisco's Oceanside discharges were not grandfathered in, San Francisco would likely be required to treat all discharges (including CSDs) to secondary levels or better.

5.7 Renewal of Ocean Plan Exception for Wet Weather Discharges

The Ocean Plan prohibits the discharge or by-pass of wastewater not conforming to the standards outlined within the Ocean Plan. The City and County of San Francisco contains and treats the majority of wastewater flows, yet when storage is exceeded under wet weather conditions, combined flows from the City's Westside Wet Weather Facilities are discharged with flow-through treatment (screening, settling, and processed through a baffle system to remove floatables) to one of seven shoreline outfalls. The Westside Wet Weather Facilities were designed so that these discharges would occur with an average frequency of eight times per year. These combined sewer discharges require an exception to the Ocean Plan.

An exception to the Ocean Plan may be granted if the State Board determines that 1) the exception will not compromise protection of ocean waters for beneficial uses, and 2) the public interest will be served. Exceptions to the Ocean Plan that are already in effect are to be reviewed during the Triennial Review process, during which an exception can be re-opened or revoked by the State Water Board if there is sufficient cause.

On March 23, 1979 the State Board adopted Order 79-16, which gives the Oceanside combined sewer discharges an exception from terms in the Ocean Plan. This exception is conditional. In the 2009 permit the RWQCB listed conditions outlined in the Order;

- Self-monitoring in accordance with Regional Water Board specifications,
- Beaches and shellfish harvesting areas potentially affected by CSODs need to be posted,

- To the greatest extent practical, the Discharger needed to design, construct, and operate wet weather facilities to comply with Ocean Plan requirements.
- Aside from the average of eight CSOD events per year, all other storm water runoff needed to be contained, and the discharge of all other untreated waste to waters of the State was to be prohibited (the provision for eight overflow events per year is the design basis of the effluent treatment system).

The 2009 permit includes provisions to ensure each of these conditions is met, if it hasn't been met already.

The beneficial uses identified as needed to be protected in the Order include protection of coliform, and floatables are the constituents of concern with regards to protection of these beneficial uses. For each of the constituents, the Order states the following as to why beneficial uses will still be protected:

Toxicity –

1) Wet weather events are intermittent – "No organism in the marine environment would ever be exposed to undiluted overflow for more than a few hours."
2) Prior to the construction and operation of the wet weather facilities, when there was an average of 114 overflows per year (versus the average of 8 overflows currently), there was no sign of toxicity impairment.
3) With the combined system, approximately 86% of stormwater receives treatment where as in most systems, 0% is treated which is an overall benefit to beneficial uses.

Coliform –

1) Prior to the construction and operation of the wet weather facilities, when there was an average of 114 overflows per year (versus the average of 8 overflows currently), there were no reported incidences of disease from contact recreation or consumption of shellfish.
2) Prior to the construction of the wet weather facilities, beaches were closed from October through April; with the new facilities, closings were anticipated on average 25 days per year.

Floatables – which can contain fecal matter and prolong coliform concentrations in the receiving water.

1) Prior to the construction and operation of the wet weather facilities, when there was an average of 114 overflows per year (versus the 8 overflows currently), there were no reported incidences of disease from contact recreation or consumption of shellfish.
2) Wet weather flows can contain substantial floatable material. With the combined system, there was anticipated to be a 70-95% reduction in floatables, resulting in an overall reduction in floatable releases.

The USEPA approved the exception on August 17, 1979 finding that as designed, the near-shore discharge CSDs would not compromise beneficial uses. This exception is still referenced in the 2009 Oceanside discharge permit.

Since the Order was adopted, the Combined Sewer Overflow (CSO) Control Policy has since been developed and adopted. The Ocean Plan now states, “Notwithstanding any other provisions in the plan, discharges from the City of San Francisco’s combined sewer system are subject to the U.S. EPA’s CSO Control Policy.” In the 2009 permit, the RWQCB/EPA states the following regarding that statement: “In large part, this acknowledgement is a response to State Water Board Order No. WQ 79-16 (March 23, 1979), which granted an exception from the Ocean Plan for wet weather discharges from the Discharger’s diversion structures in the western-most portion of the Discharger’s combined sewer system.”

In the future, the RWQCB may re-evaluate this exception and apply water quality objectives to wet weather discharges. Existing water quality objectives are not necessarily applicable to wet weather discharges (i.e. applied year-round). Therefore, this possibility would likely only occur if water quality objectives specific to wet-weather were developed that ensured wet-weather discharges were protective of beneficial uses. For now, the City can expect the continuation of the Ocean Plan Exception in its current form.

6.0 POTENTIAL REGULATORY SCENARIOS

San Francisco currently meets all of the requirements of its existing NPDES discharge permits. The following presents potential regulatory scenarios that should be considered through the 2020 (near-term) and 2040 (long-term) master planning horizons. The potential regulatory scenarios identified for the 2040 master-planning horizon are in addition to those scenarios already described through 2020.

6.1 Oceanside Regulatory Scenario Through 2020

Dry-Weather Flows

- Concerns over the protection of marine mammals from pathogens found in wastewater have been raised. Flexibility for the addition of disinfection for dry weather flows should be incorporated into the master planning process.

Wet-Weather Flows

- Concerns over the protection of marine mammals from pathogens found in stormwater have also been raised. Flexibility for the addition of disinfection of wet weather flows from the SWOO should be incorporated into the master planning process.

6.2 Oceanside Regulatory Scenario Through 2040

Wet-Weather Flows

- The Marine Sanctuary Exclusion Zone excludes the Southwest Ocean Outfall discharge and shoreline discharges from the Monterey Bay Marine Sanctuary. If the Exclusion Zone were eliminated and San Francisco's Oceanside discharges were not "grandfathered in", secondary treatment or better of wet weather flows, including decant flows and near-shore discharges CSDs, may be required.

- If the exemption allowing near-shore discharges CSDs to discharge without having to meet water quality standards were eliminated, near-shore discharges CSDs and wet weather flows may need to meet current or new water quality standards. Alternatives should allow for wet-weather flows to meet water quality standards.

APPENDIX A - COMBINED SEWER DISCHARGES

APPENDIX A - COMBINED SEWER DISCHARGES

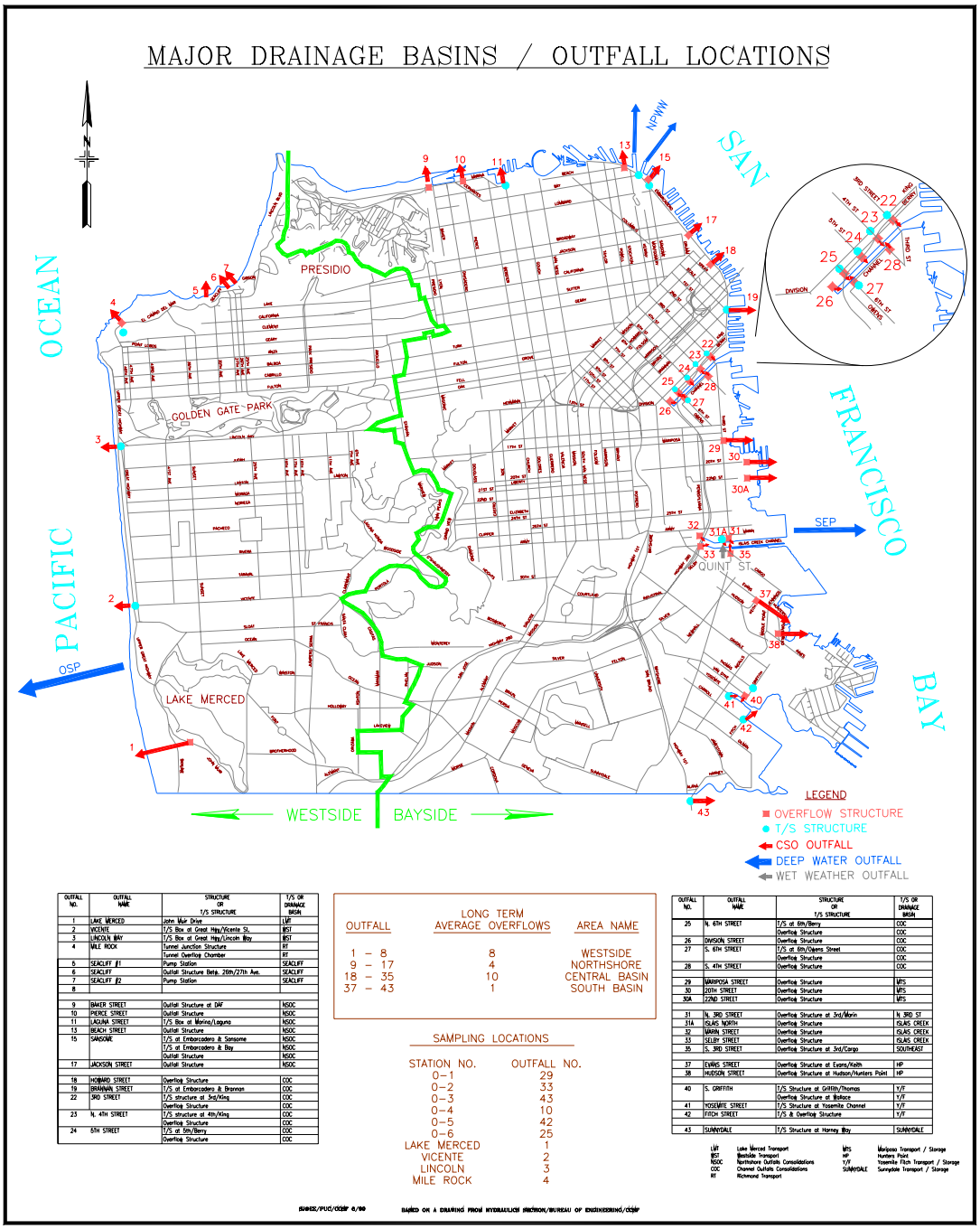

OUTFALL NO.	OUTFALL NAME	STRUCTURE OR T/S STRUCTURE	T/S OR DRAINAGE BASIN
1	LAKE MERCED	John Muir Drive	LMT
2	VICENTE	T/S Box at Great Hwy/Vicente St.	WST
3	LINCOLN WAY	T/S Box at Great Hwy/Lincoln Way	WST
4	MILE ROCK	Tunnel Junction Structure	RT
		Tunnel Overflow Chamber	RT
5	SEACLIFF #1	Pump Station	SEACLIFF
6	SEACLIFF	Outfall Structure Betw. 26th/27th Ave.	SEACLIFF
7	SEACLIFF #2	Pump Station	SEACLIFF
8			
9	BAKER STREET	Outfall Structure at DAF	NSOC
10	PIERCE STREET	Outfall Structure	NSOC
11	LAGUNA STREET	T/S Box at Marina/Laguna	NSOC
13	BEACH STREET	Outfall Structure	NSOC
15	SANSOME	T/S at Embarcadero & Sansome	NSOC
		T/S at Embarcadero & Bay	NSOC
		Outfall Structure	NSOC
17	JACKSON STREET	Outfall Structure	NSOC
18	HOWARD STREET	Overflow Structure	COC
19	BRANNAN STREET	T/S at Embarcadero & Brannan	COC
22	3RD STREET	T/S structure at 3rd/King	COC
		Overflow Structure	COC
23	N. 4TH STREET	T/S structure at 4th/King	COC
		Overflow Structure	COC
24	6TH STREET	T/S at 6th/Berry	COC
		Overflow Structure	COC

OUTFALL	LONG TERM AVERAGE OVERFLOWS	AREA NAME
1 – 8	8	WESTSIDE
9 – 17	4	NORTHSHORE
18 – 35	10	CENTRAL BASIN
37 – 43	1	SOUTH BASIN

SAMPLING LOCATIONS

STATION NO.	OUTFALL NO.
0–1	29
0–2	33
0–3	43
0–4	10
0–5	42
0–6	25
LAKE MERCED	1
VICENTE	2
LINCOLN	3
MILE ROCK	4

OUTFALL NO.	OUTFALL NAME	STRUCTURE OR T/S STRUCTURE	T/S OR DRAINAGE BASIN
25	N. 6TH STREET	T/S at 6th/Berry	COC
		Overflow Structure	COC
26	DIVISION STREET	Overflow Structure	COC
27	S. 6TH STREET	T/S at 6th/Owens Street	COC
		Overflow Structure	COC
28	S. 4TH STREET	Overflow Structure	COC
29	MARIPOSA STREET	Overflow Structure	MPS
30	20TH STREET	Overflow Structure	MPS
30A	22ND STREET	Overflow Structure	MPS
31	N. 3RD STREET	Overflow Structure at 3rd/Marin	N. 3RD ST
31A	ISLAIS NORTH	Overflow Structure	ISLAIS CREEK
32	MARIN STREET	Overflow Structure	ISLAIS CREEK
33	SELBY STREET	Overflow Structure	ISLAIS CREEK
35	S. 3RD STREET	Overflow Structure at 3rd/Cargo	SOUTHEAST
37	EVANS STREET	Overflow Structure at Evans/Keith	HP
38	HUDSON STREET	Overflow Structure at Hudson/Hunters Point	HP
40	S. GRIFFITH	T/S Structure at Griffith/Thomas	Y/F
		Overflow Structure at Wallace	Y/F
41	YOSEMITE STREET	T/S Structure at Yosemite Channel	Y/F
42	FITCH STREET	T/S & Overflow Structure	Y/F
43	SUNNYDALE	T/S Structure at Harney Way	SUNNYDALE

LMT	Lake Merced Transport	MPS	Mariposa Transport / Storage
WST	Westside Transport	HP	Hunters Point
NSOC	Northshore Outfalls Consolidations	Y/F	Yosemite Fitch Transport / Storage
COC	Channel Outfalls Consolidations	SUNNYDALE	Sunnydale Transport / Storage
RT	Richmond Transport		

BAMEE/PUC/CCSSP 8/00 BASED ON A DRAWING FROM HYDRAULICS SECTION/BUREAU OF ENGINEERING/CCSSP

APPENDIX B - OCEANSIDE POLLUTANTS OF CONCERN

APPENDIX B - OCEANSIDE POLLUTANTS OF CONCERN

Purpose

This Appendix presents how near-term pollutants of concern in the treated wastewater discharged from San Francisco's Oceanside Treatment Plant are identified. Specifically, this Appendix presents the Reasonable Potential Analysis (RPA) from the 2009 permit renewal. The RPA assess the quality of the current discharge to determine if any constituents have the potential to exceed effluent limitations.

San Francisco's Oceanside effluent is discharged to federal waters and thus federal (EPA) requirements apply. However, EPA has never promulgated water quality criteria for ocean waters and, in the past, has "borrowed" state Ocean Plan criteria although this approach is contentious. It should also be noted that numeric effluent limits are not applied to wet weather discharges; instead wet weather discharges are subject to the requirements outlined in the *CSO Control Policy*.

Summary

The discharge is expected to fully comply with the 2009 permit. San Francisco wastewater continues to show decreased loadings of pollutants such as copper and mercury. This is possibly the result of the City's aggressive pollution prevention program. Thus the quality of the discharge is expected to continue improving which will further enhance compliance.

Discussion

Effluent Limitations for Wastewater Treatment Facilities

In general, permits have two types of limitations - technology-based and water quality-based. For municipal wastewater treatment facilities, the technology based effluent limitations implement EPA's Secondary Treatment Standards1 and any other performance-based effluent limitations established by the State. The water quality-based effluent limitations are derived from the water quality standards applicable to the waterbody into which the effluent is discharged, in this case, the Pacific Ocean.

Table 1 identifies the sources of the requirements used to establish the technology-based and water quality-based effluent limits for San Francisco's Oceanside Treatment Plant.

1 The secondary-level treatment standards are defined in federal regulations at 40 CFR 133.

Technology-Based Effluent Limitations

San Francisco's wastewater treatment facilities generally do not have difficulty complying with the technology-based effluent limitations. Most treatment facilities upgraded years ago to full secondary treatment and easily comply with the technology-based requirements.

TABLE 1 Basis of Numeric Effluent Limitations potentially applicable to the Oceanside Plant

Technology-Based Effluent Limitations	Water Quality-Based Effluent Limitations (WQBEL)
Secondary level treatment requirements (EPA) · total suspended solids (TSS) · biochemical oxygen demand (BOD) · pH **Previous permit** (originally derived from the *Effluent Limitations* in the California Ocean Plan Table A) · turbidity · oil & grease	**California Ocean Plan** (Table B) ▪ marine aquatic life objectives ▪ human health based objectives for the consumption of organisms

Technology-Based Effluent Limitations

San Francisco's wastewater treatment facilities generally do not have difficulty complying with the technology-based effluent limitations. Most treatment facilities upgraded years ago to full secondary treatment and easily comply with the technology-based requirements.

Water Quality-Based Effluent Limitations (WQBEL)

The WQBELs present the most significant compliance concerns for wastewater treatment plants. WQBELs are determined in a two-part process:

Part 1 Reasonable Potential Analysis (RPA) – *identification of pollutants that require limitations*

Part 2 Calculation of Final (or Interim) Effluent Limits – *establishing the specific limitations used in the permit*

The following text is the draft RWQCB/EPA's RPA and calculation of WQBELs used in the 2009 permit. This RPA was presented as Draft to San Francisco on May 26, 2008. In between the time that this RPA was developed and when the permit was finally adopted in August 2009, two significant changes were made that are NOT reflected in the following information. These changes include the following:

1) The dilution allowance was changed from 76:1 to 150:1
2) Use of Bioaccumulation Equivalency Factors (BEFs) was allowed to be used in calculating dioxin (TCDD equivalents) RPA.

Additionally, comments by the SFPUC were submitted to the RWQCB/EPA in response to this draft RPA analysis.

For the most part, the results are the same. For the two constituents that were found initially to have reasonable potential (i.e. mercury and dioxin), the RWQCB re-evaluated only these two parameters instead of re-running the entire analysis. For mercury, the RWQCB/EPA re-ran the calculation of effluents limits using a dilution of 150:1 (vs.76:1) and for dioxin, the RWQCB/EPA found that, when using BEFs, no effluent limit was required. The remaining portion of this Appendix presents the RWQCB/EPA analysis:

> EPA has performed a reasonable potential analysis (RPA) in accordance with procedures established by the California State Water Resources Control Board (State Water Board) for discharges to the State's territorial ocean waters, as those procedures are described in Section III. C. and Appendix VI of the California Ocean Plan. In general, the procedure is a statistical method that evaluates an effluent data set while taking into account the averaging period of WQOs, the long term variability of pollutants in the effluent, limitations associated with sparse data sets, and uncertainty associated with censored data sets. The procedure assumes a lognormal distribution of the effluent data set and compares the 95th percentile concentration at 95 percent confidence of each Table B pollutant, accounting for dilution, to the applicable water quality criterion. The RPA results in one of three endpoints.
>
> Endpoint 1 – There is "reasonable potential," and a WQBEL and monitoring are required.
>
> Endpoint 2 - There is no "reasonable potential." WQBELs are not required, and monitoring is required at the discretion of the Regional Water Board.
>
> Endpoint 3 - The RPA is inconclusive. Existing WQBELs are retained, and monitoring is required.
>
> The State Water Board has developed a reasonable potential calculator, which is available at http://www.waterboards.ca.gov/plnspols/docs/oplans/rpcalc.zip. The calculator (RPcalc 2.0) was used in the development of this Order and considers several pathways in the determination of reasonable potential.
>
> a. First Path
>
> If available information about the receiving water or the discharge supports a finding of reasonable potential without analysis of effluent data, the permitting authority may decide that WQBELs are necessary after a review of such information. Such information may include the facility or discharge type, solids loading, lack of dilution, history of compliance problems, potential toxic effects, fish tissue data, 303(d)

status of the receiving water, the presence of threatened or endangered species or their critical habitat, or other information.

b. Second Path

If any pollutant concentration, adjusted to account for dilution, is greater than the most stringent applicable water quality objective, there is reasonable potential for that pollutant.

c. Third Path

If the effluent data contains 3 or more detected and quantified values (i.e., values that are at or above the ML), and all values in the data set are at or above the ML, a parametric RPA is conducted to project the range of possible effluent values. The 95th percentile concentration is determined at 95 percent confidence for each pollutant, and compared to the most stringent applicable WQO to determine reasonable potential. A parametric analysis assumes that the range of possible effluent values is distributed lognormally. If the 95th percentile value is greater than the most stringent applicable WQO, there is reasonable potential for that pollutant.

d. Fourth Path

If the effluent data contains 3 or more detected and quantified values (i.e., values that are at or above the ML), but at least one value in the data set is less than the ML, a parametric RPA is conducted according to the following steps.

i. If the number of censored values (those expressed as a “less than” value) account for less than 80 percent of the total number of effluent values, calculate the M_L (the mean of the natural log of transformed data) and S_L (the standard deviation of the natural log of transformed data) and conduct a parametric RPA, as described above for the Third Path.

ii. If the number of censored values account for 80 percent or more of the total number of effluent values, conduct a non-parametric RPA, as described below for the Fifth Path. (A non-parametric analysis becomes necessary when the effluent data is limited, and no assumptions can be made regarding its possible distribution.)

e. Fifth Path

A non-parametric RPA is conducted when the effluent data set contains less than 3 detected and quantified values, or when the effluent data set contains 3 or more detected and quantified values but the number of censored values account for 80 percent or more of the total number of effluent values. A non-parametric analysis is conducted by ordering the data, comparing each result to the applicable WQO, and accounting for ties. The sample number is reduced by one for each tie, when the dilution-adjusted method detection limit (MDL) is greater than the WQO. If the adjusted sample number, after accounting for ties, is greater than 15, the pollutant has no reasonable potential to exceed the WQO. If the sample number is 15 or less, the RPA is inconclusive, monitoring is required, and any existing effluent limits in the expiring permit are retained.

The following table presents results of the RPA, performed in accordance with procedures described by the Ocean Plan and summarized above, for the Oceanside Treatment Plant. The RPA endpoint for each Ocean Plan Table B pollutant is identified, demonstrating “reasonable potential” for mercury and TCDD equivalents. As a result, this Order establishes effluent limitations for mercury and TCDD equivalents.

As shown in the following table, the RPA commonly leads to Endpoint 3, meaning that the RPA is inconclusive, when a majority of the effluent data is reported as ND (not detected). In these circumstances, EPA views the “inconclusive” result as an indication of no concern for a particular pollutant; however, additional monitoring will be required for those pollutants during the term of the reissued permit.

Table F-X
RPA Results for the Oceanside Treatment Plant
Southwest Ocean Outfall

Dilution: 76 to 1

Table B Pollutant	Most Stringent WQO (µg/L)	No. of Samples	No. of Non-Detects	Max Effluent Conc. (µg/L)	RPA Result, Comment
Objectives for Protection of Marine Aquatic Life					
Arsenic	8	51	34	5.9	Endpoint 2 – An effluent limitation is not required for this pollutant. Monitoring may be required as appropriate.
Cadmium	1	51	32	1.9	Endpoint 2 – An effluent limitation is not required for this pollutant. Monitoring may be required as appropriate.
Chlorinated Phenolics	1	15	15	ND	Endpoint 3 – RPA is inconclusive. Less than 3 detects or greater than 80% ND.
Chromium (VI)	2	-----	-----	-----	No Effluent Data
Copper	3	51	0	70	Endpoint 2 – An effluent limitation is not required for this pollutant. Monitoring may be required as appropriate.
Cyanide	1	52	9	6.8	Endpoint 2 – An effluent limitation is not required for this pollutant. Monitoring may be required as appropriate.
Endosulfan (total)	0.009	18	18	ND	Endpoint 2 – An effluent limitation is not required for this pollutant. Monitoring may be required as appropriate.
Endrin	0.002	18	18	ND	Endpoint 2 – An effluent limitation is not required for this pollutant. Monitoring may be required as appropriate.
HCH	0.004	18	18	ND	Endpoint 2 – An effluent limitation is not required for this pollutant. Monitoring may be required as appropriate.
Lead	2	51	20	8.6	Endpoint 2 – An effluent limitation is not required for this pollutant. Monitoring may be required as appropriate.
Mercury	0.04	53	0	12	**Endpoint 1 – An effluent limitation must be developed for this pollutant. Monitoring is required.**
Nickel	5	51	3	7.2	Endpoint 2 – An effluent limitation is not required for this pollutant. Monitoring may be required as appropriate.
Non-chlorinated Phenolics	30	15	14	5.0	Endpoint 3 – RPA is inconclusive. Less than 3 detects or greater than 80% ND.
Selenium	15	51	37	1.8	Endpoint 2 – An effluent limitation is not required for this pollutant. Monitoring may be required as appropriate.
Silver	0.7	51	21	3.8	Endpoint 2 – An effluent limitation is not required for this pollutant. Monitoring may be required as appropriate.
Zinc	20	51	0	146	Endpoint 2 – An effluent limitation is not required for this pollutant. Monitoring may be required as appropriate.

Table B Pollutant	Most Stringent WQO (µg/L)	No. of Samples	No. of Non-Detects	Max Effluent Conc. (µg/L)	RPA Result, Comment
Objectives for Protection of Human Health – Noncarcinogens					
1,1,1-Trichloroethane	540000	20	20	ND	Endpoint 2 – An effluent limitation is not required for this pollutant. Monitoring may be required as appropriate.
2,4-Dinitrophenol	4.0	15	14	5.0	Endpoint 3 – RPA is inconclusive. Less than 3 detects or greater than 80% ND.
2-Methyl-4,6-Dinitrophenol	220	15	15	ND	Endpoint 3 – RPA is inconclusive. Less than 3 detects or greater than 80% ND.
Acrolein	220	12	11	22	Endpoint 3 – RPA is inconclusive. Less than 3 detects or greater than 80% ND.
Antimony	1200	18	17	0.94	Endpoint 2 – An effluent limitation is not required for this pollutant. Monitoring may be required as appropriate.
Bis(2-Chloroethoxy)Methane	4.4	15	15	ND	Endpoint 3 – RPA is inconclusive. Less than 3 detects or greater than 80% ND.
Bis(2-Chloroisopropyl)Ether	1200	15	15	ND	Endpoint 3 – RPA is inconclusive. Less than 3 detects or greater than 80% ND.
Chlorobenzene	570	20	18	0.44	Endpoint 2 – An effluent limitation is not required for this pollutant. Monitoring may be required as appropriate.
Chromium (III)	190000	51	30	5.4	Endpoint 2 – An effluent limitation is not required for this pollutant. Monitoring may be required as appropriate.
Dichlorobenzenes	5100	19	13	1.2	Endpoint 2 – An effluent limitation is not required for this pollutant. Monitoring may be required as appropriate.
Diethyl Phthalate	33000	15	14	0.47	Endpoint 3 – RPA is inconclusive. Less than 3 detects or greater than 80% ND.
Dimethyl Phthalate	820000	15	15	ND	Endpoint 3 – RPA is inconclusive. Less than 3 detects or greater than 80% ND.
Di-n-Butyl Phthalate	3500	15	15	ND	Endpoint 3 – RPA is inconclusive. Less than 3 detects or greater than 80% ND.
Ethylbenzene	4100	20	16	0.64	Endpoint 2 – An effluent limitation is not required for this pollutant. Monitoring may be required as appropriate.
Fluoranthene	15	17	17	ND	Endpoint 2 – An effluent limitation is not required for this pollutant. Monitoring may be required as appropriate.
Hexachlorocyclopentadiene	58	15	15	ND	Endpoint 3 – RPA is inconclusive. Less than 3 detects or greater than 80% ND.
Nitrobenzene	4.9	15	15	ND	Endpoint 3 – RPA is inconclusive. Less than 3 detects or greater than 80% ND.
Thallium	2	18	18	ND	Endpoint 2 – An effluent limitation is not required for this pollutant. Monitoring may be required as appropriate.
Toluene	85000	20	8	1.6	Endpoint 2 – An effluent limitation is not required for this pollutant. Monitoring may be required as appropriate.

Table B Pollutant	Most Stringent WQO (µg/L)	No. of Samples	No. of Non-Detects	Max Effluent Conc. (µg/L)	RPA Result, Comment
Tributylin	0.0014	17	16	0.008	Endpoint 2 – An effluent limitation is not required for this pollutant. Monitoring may be required as appropriate.
Objectives for Protection of Human Health – Carcinogens					
1,1,2,2-Tetrachloroethane	2.3	20	20	ND	Endpoint 2 – An effluent limitation is not required for this pollutant. Monitoring may be required as appropriate.
1,1,2-Trichloroethane	9.4	20	20	ND	Endpoint 2 – An effluent limitation is not required for this pollutant. Monitoring may be required as appropriate.
1,1-Dichloroethylene	0.9	20	20	ND	Endpoint 2 – An effluent limitation is not required for this pollutant. Monitoring may be required as appropriate.
1,2-Dichloroethane	28	20	19	0.08	Endpoint 2 – An effluent limitation is not required for this pollutant. Monitoring may be required as appropriate.
1,2-Diphenylhydrazine	0.16	15	15	ND	Endpoint 3 – RPA is inconclusive. Less than 3 detects or greater than 80% ND.
1,3-Dichloropropylene	8.9	20	20	ND	Endpoint 2 – An effluent limitation is not required for this pollutant. Monitoring may be required as appropriate.
1,4 Dichlorobenzene	18	19	13	0.84	Endpoint 2 – An effluent limitation is not required for this pollutant. Monitoring may be required as appropriate.
TCDD Equivalents	3.9E-9	15	0	7.6E-07	**Endpoint 1 – An effluent limitation must be developed for this pollutant. Monitoring is required.**
2,4,6-Trichlorophenol	0.29	15	15	ND	Endpoint 3 – RPA is inconclusive. Less than 3 detects or greater than 80% ND.
2,4-Dinitrotoluene	2.6	15	15	ND	Endpoint 3 – RPA is inconclusive. Less than 3 detects or greater than 80% ND.
3,3'-Dichlorobenzidine	0.0081	15	15	ND	Endpoint 3 – RPA is inconclusive. Less than 3 detects or greater than 80% ND.
Acrylonitrile	0.10	13	13	ND	Endpoint 3 – RPA is inconclusive. Less than 3 detects or greater than 80% ND.
Aldrin	2.2E-5	18	18	ND	Endpoint 2 – An effluent limitation is not required for this pollutant. Monitoring may be required as appropriate.
Benzene	5.9	20	20	ND	Endpoint 2 – An effluent limitation is not required for this pollutant. Monitoring may be required as appropriate.
Benzidine	6.9E-5	15	15	ND	Endpoint 3 – RPA is inconclusive. Less than 3 detects or greater than 80% ND.
Beryllium	0.033	18	17	0.086	Endpoint 2 – An effluent limitation is not required for this pollutant. Monitoring may be required as appropriate.
Bis(2-Chloroethyl)Ether	0.045	15	15	ND	Endpoint 3 – RPA is inconclusive. Less than 3 detects or greater than 80% ND.
Bis(2-Ethylhexyl)Phthalate	3.5	15	15	ND	Endpoint 3 – RPA is inconclusive. Less than 3 detects or greater than 80% ND.

Table B Pollutant	Most Stringent WQO (µg/L)	No. of Samples	No. of Non-Detects	Max Effluent Conc. (µg/L)	RPA Result, Comment
Carbon Tetrachloride	0.90	17	17	ND	Endpoint 2 – An effluent limitation is not required for this pollutant. Monitoring may be required as appropriate.
Chlordane	2.3E-5	18	18	ND	Endpoint 2 – An effluent limitation is not required for this pollutant. Monitoring may be required as appropriate.
Chlorodibromomethane	8.6	20	19	0.95	Endpoint 2 – An effluent limitation is not required for this pollutant. Monitoring may be required as appropriate.
Chloroform	130	20	5	9.8	Endpoint 2 – An effluent limitation is not required for this pollutant. Monitoring may be required as appropriate.
DDT (total)	0.00017	18	18	ND	Endpoint 2 – An effluent limitation is not required for this pollutant. Monitoring may be required as appropriate.
Dichlorobromomethane	6.2	18	13	0.65	Endpoint 2 – An effluent limitation is not required for this pollutant. Monitoring may be required as appropriate.
Dieldrin	0.00004	18	18	ND	Endpoint 2 – An effluent limitation is not required for this pollutant. Monitoring may be required as appropriate.
Halomethanes	130	19	14	0.66	Endpoint 2 – An effluent limitation is not required for this pollutant. Monitoring may be required as appropriate.
Heptachlor	0.00005	18	18	ND	Endpoint 2 – An effluent limitation is not required for this pollutant. Monitoring may be required as appropriate.
Heptachlor Epoxide	0.00002	18	18	ND	Endpoint 2 – An effluent limitation is not required for this pollutant. Monitoring may be required as appropriate.
Hexachlorobenzene	0.00021	15	15	ND	Endpoint 3 – RPA is inconclusive. Less than 3 detects or greater than 80% ND.
Hexachlorobutadiene	14	15	15	ND	Endpoint 3 – RPA is inconclusive. Less than 3 detects or greater than 80% ND.
Hexachloroethane	2.5	15	15	ND	Endpoint 3 – RPA is inconclusive. Less than 3 detects or greater than 80% ND.
Isophorone	730	15	15	ND	Endpoint 3 – RPA is inconclusive. Less than 3 detects or greater than 80% ND.
Methylene Chloride	450	20	14	1.6	Endpoint 2 – An effluent limitation is not required for this pollutant. Monitoring may be required as appropriate.
N-Nitrosodimethylamine	7.3	15	15	ND	Endpoint 3 – RPA is inconclusive. Less than 3 detects or greater than 80% ND.
N-Nitrosodi-n-Propylamine	0.38	15	15	ND	Endpoint 3 – RPA is inconclusive. Less than 3 detects or greater than 80% ND.
N-Nitrosodiphenylamine	2.5	15	15	ND	Endpoint 3 – RPA is inconclusive. Less than 3 detects or greater than 80% ND.
PAHs (total)	0.0088	20	18	0.0083	Endpoint 2 – An effluent limitation is not required for this pollutant. Monitoring may be

Table B Pollutant	Most Stringent WQO (µg/L)	No. of Samples	No. of Non-Detects	Max Effluent Conc. (µg/L)	RPA Result, Comment
					required as appropriate.
PCBs	1.9E-5	18	18	ND	Endpoint 2 – An effluent limitation is not required for this pollutant. Monitoring may be required as appropriate.
Tetrachloroethylene	2.0	20	9	8.4	Endpoint 2 – An effluent limitation is not required for this pollutant. Monitoring may be required as appropriate.
Toxaphene	0.00021	18	18	ND	Endpoint 2 – An effluent limitation is not required for this pollutant. Monitoring may be required as appropriate.
Trichloroethylene	27	20	20	ND	Endpoint 2 – An effluent limitation is not required for this pollutant. Monitoring may be required as appropriate.
Vinyl Chloride	36	20	19	1.3	Endpoint 2 – An effluent limitation is not required for this pollutant. Monitoring may be required as appropriate.

Notes to the table, above:

- NA indicates that effluent data is not available.
- ND indicates that the pollutant was not detected.
- Minimum probable initial dilution for this discharger is 76:1.
- Effluent data used for this RPA are from October 2003 to December 2007 for most inorganics, and from November 2003 to November 2007 for most organics.

WQBEL Calculations

As described by Section III. C of the Ocean Plan, effluent limits for Table B pollutants that show reasonable potential are calculated according to the following equation.

$$Ce = Co + Dm (Co – Cs)$$

Where …

Ce = the effluent limitation (µg/L)

Co = the concentration (the water quality objective) to be met at the completion of initial dilution (µg/L).

Cs = background seawater concentration (µg/L)

Dm = minimum probable initial dilution expressed as parts seawater per part wastewater

Except for the 5 metals in the table below, background concentrations of all Table B pollutants are considered to be zero (Cs = 0)

Table F-X. Background Seawater Concentrations

Pollutant	Cs (µg/L)
Arsenic	3.0
Copper	2.0
Mercury	0.0005
Silver	0.16
Zinc	8.0

Because the RPA for the Oceanside facility showed reasonable potential for mercury and TCDD equivalents, this Order establishes effluent limitations for these pollutants as follows.

Applicable water quality objectives from the Ocean Plan are:

Table F-X. Water Quality Objectives

Pollutant	WQ Objective (30 Day Average)
Mercury	0.04 µg/L
TCDD equivalents	3.9E-09 µg/L

Using the equation, Ce = Co + Dm (Co – Cs), a 30 day average effluent limitation for mercury is calculated:

Ce = 0.04 + 76 (0.04 – 0.0005) = 3.0 µg/L

Using the equation, Ce = Co + Dm (Co – Cs), a 30 day average effluent limitation for TCDD equivalents is calculated:

Ce = 3.9E-09 + 76 (3.9E-09 – 0.0) = 3.0E-07 µg/L

Whole Effluent Toxicity (WET)

Due to the potential for an aggregate toxic effect resulting from a mixture of pollutants in discharges from large POTWs, whole effluent, acute and chronic toxicity limitations are being retained in the reissued permit. Limitations for whole effluent toxicity (WET) are calculated in accordance with procedures established by the Ocean Plan, which establishes the following water quality objectives for acute and chronic toxicity.

Table F-X. Whole Effluent Toxicity - Water Quality Objectives

Pollutant	WQ Objective (Daily Maximum)
Acute WET	0.3 TUa
Chronic WET	1.0 TUc

An effluent limitation for chronic toxicity is determined with the following calculation.

$$Ce = Co + Dm (Co – Cs) \text{ … therefore …}$$

$$\text{Daily Maximum Chronic WET Limit} = 1.0 + 76 (1.0 – 0) = 77 \text{ TUc}$$

An effluent limitation for acute toxicity is determined with the following calculation. [Note that, in determining limitations for acute WET, the Ocean Plan allows for a mixing zone for the acute toxicity objective that is 10 percent of the distance from the edge of the outfall structure to the edge of the chronic mixing zone.]

$$Ce = Co + (0.1) Dm (Co – Cs) \text{ … therefore …}$$

$$\text{Daily Maximum Acute WET Limit} = 0.3 + (0.1) (76) (0.3 – 0) = 2.3 \text{ TUa}$$

APPENDIX C - OCEANSIDE DILUTION FACTORS

APPENDIX C - OCEANSIDE DILUTION FACTORS

The dilution factor is used in the calculation of water quality-based effluent limits and can have a significant effect on the compliance status of a wastewater discharge. San Francisco has argued during previous permit negotiations that the dilution factor should be based on EPA's updated discharge models and take into account such factors as ocean currents. The U.S. EPA agreed to consider revising the dilution factor for the 2009 permit cycle.

Discussion

Southwest Ocean Outfall - The Ocean Outfall was specifically designed to maximize dilution in order to lessen the potential impact of the discharge on the marine environment. The end of the outfall consists of a diffuser section approximately 900 meters in length and 3.5 meters in diameter, with risers located every 11 meters. Twenty-one out of 85 risers are currently in operation. Each riser is constructed with eight discharge points.

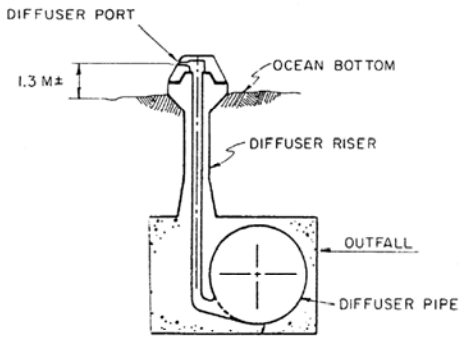

Design drawing of outfall riser and diffuser port

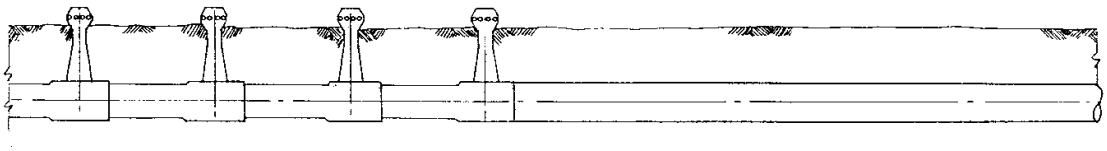

Schematic of outfall section

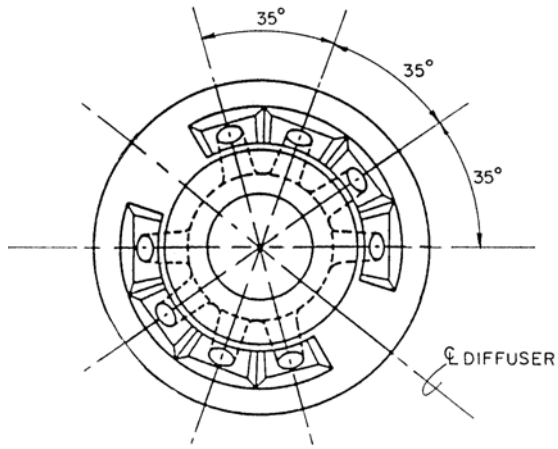

Diffuser cap plan

Calculation of effluent limits using a dilution factor – The Ocean Plan provides a standard formula for calculating effluent limits taking into account dilution:

Ce = Co + Dm (Co - Cs); where:

Ce = the effluent concentration limitation used in the permit
Co = the concentration (water quality objective) to be met at the completion of initial dilution
Cs = background seawater concentration (from Ocean Plan Table C)
Dm = minimum probable initial dilution expressed as parts seawater per part wastewater.

As can be seen from the equation, the dilution factor can have a significant effect on water quality-based effluent limitations and on the compliance status of a wastewater discharge.

In the Ocean Plan, initial dilution is defined as the process which results in the rapid and irreversible turbulent mixing of wastewater with ocean water around the point of discharge.

> "For a submerged buoyant discharge, characteristic of most municipal and industrial wastes that are released from the submarine outfalls, the momentum of the discharge and its initial buoyancy act together to produce turbulent mixing. Initial dilution in this case is completed when the diluting wastewater ceases to rise in the water column and first begins to spread horizontally."

It is state policy to assume that there is no water movement (i.e., currents) at the point of discharge. While such a situation is theoretically possible, it is not very probably and EPA models. The no current assumption is particularly inappropriate for the limitations which assume a long-term compliance period (e.g., 6 months). The most accurate modeling efforts utilize actual ocean conditions including time series of oceanographic data including measurements of current speed and direction. This data is available for Ocean outfall and San Francisco has proposed that this more accurate data be used in the determination of the dilution factor.

Dilution factor used in the Oceanside permit - In the 2003 permit, a dilution factor of 76:1 for the flows discharged through the Ocean Outfall was used. During the final stages of the 2009 permit, the EPA agreed on a 150:1 dilution factor based on updated models.

Applicability of Ocean Plan in federal waters – San Francisco has argued that the California Ocean Plan is not applicable to the SWOO at the point of discharge, because the SWOO discharge is in Federal waters. The discharge is located between 0.3 and 1.5 miles beyond State waters. Although U.S. EPA has "borrowed" numerical standards from the Ocean Plan in the absence of federal standards, the Ocean Plan in its entirety does not apply.

San Francisco's position is that federal regulations apply, specifically the Ocean Discharge Criteria at 40 CFR 125.121(c), which state that discharges to Federal waters have a mixing zone of 100 meters or a greater distance if based on an appropriate model.

Updated discharge model - San Francisco requested an updated model of the discharge from Professor Philip Roberts, who was one of the developers of the current models used by U.S. EPA. Roberts submitted a report to San Francisco based on numerical simulations intended to predict wastefield behavior. The model he used was the mathematical model NRFIELD. The modeling effort was supported by comparisons with field and laboratory studies on the San Francisco outfall as well as many other outfalls. The model was run with time series of oceanographic data consisting of simultaneous measurements of current speed and direction and density stratification obtained by recording current meters.

Dr. Roberts' report stated that "considerable advances have been made in understanding the mixing and dynamics of buoyant outfall plumes [since 1990], and earlier predictions are now archaic". Dr. Roberts states "[c]learly, the dilution value of 76:1 used in the previous [SWOO NPDES] permit is unrealistically low".

The report concluded:

> "The harmonic average dilution computed from the simulations is 250:1. It is argued that this value is actually conservatively low, but its use appears prudent given the effects of recirculation and overall flushing. The dilution computed in support of the previous permit application in 1990 was 76:1. This value is unrealistically low due to use of early mathematical dilution models, overly conservative modeling assumptions, and neglect of the oceanographic variability. It is therefore recommended that this value be replaced by the value of 250:1 whose computations are documented in this report."

In addition San Francisco conducted dye studies in conjunction with U.S. EPA and the National Oceanic and Atmospheric Administration (NOAA) under worst case field conditions and calculated infield initial dilutions generally greater than 200:1.

According to the RWQCB/EPA in the 2009 permit: The reasonable potential calculation for this Order is based on a dilution ratio of 150:1. This is based on an updated dilution model

submitted by the Discharger that averaged UM3 and NRFIELD results and utilized averaged oceanographic data from 1988. If the Discharger provides new information to use with new dilution modeling (see provision VI.C.2.b of this Order), any new results based on updated oceanographic data may be considered for the next permit reissuance."

APPENDIX D - DISINFECTION OF DRY WEATHER OCEANSIDE FLOWS

APPENDIX D - DISINFECTION OF DRY WEATHER OCEANSIDE FLOWS

Current Practices

The City and County of San Francisco's Oceanside secondary treatment plant does not currently disinfect its effluent, which is discharged to the Southwest Ocean Outfall (SWOO), an ocean outfall that discharges 3.75 miles off the Westside shoreline into the Pacific Ocean. The current permit allows for a dilution of 150:1. Disinfection is most important for the protection of contact recreation use and drinking water sources. The Pacific Ocean is not a drinking water source and disinfection of SWOO discharges was found not be necessary to protect recreational uses.

In 1987 and 1988, San Francisco studied the outfall area to determine the effects of its discharge as it relates to disinfection. A technical report entitled "Wastefield Transport and Bacteriological Compliance Studies of the San Francisco Ocean Outfall," was developed. The report found that the discharge from the SWOO does not flow back near shore, and will therefore have no impact on shoreline recreational users. As a result of the report, the Regional Water Quality Control Board adopted order No. 89-71 on May 17, 1989, deleting the disinfection requirements.

According to the 2003 NPDES permit for the Oceanside discharge (NPDES Permit No. CA 0037681),

> "The findings [from the report] indicate that the present non-disinfected wastewater discharge from the SWOO does not violate the California Ocean Plan bacteriological body-contact standards; these standards have not changed since the 1983 version. Monitoring since 1986 supports this conclusion. Therefore, this order does not require disinfection of the wastewater discharged."

An additional consideration that has been raised is disinfection for the protection of marine mammals. The National Oceanic and Atmospheric Administration (NOAA) and the U.S. Fish and Wildlife Services have expressed concerns regarding the potential of stormwater and undisinfected wastewater to transmit pathogens to marine mammals. Mammalian effects were not addressed in the original bacteriological report. In the 2003 permit, the San Francisco Bay Regional Water Quality Control Board (RWQCB) required San Francisco to conduct a special study identifying monitoring methodologies used to determine the presence of pathogens in wastewater with the potential to affect marine mammals. On October 28, 2005 San Francisco submitted a report tilted, "A Review of the State of the Science for Detecting *Toxoplasma gondii, Sarcocystis neurona*, and Morbillivirus – Potential Pathogens for Marine Mammals – in Wastewater and Stormwater" to the RWQCB in compliance with the permit request. This thorough report recognizes that

little or no information is available on the environmental occurrence, fate, and transport of *Toxoplasma gondii, Sarcocystis neurona*, and Morbillivirus, partly due to the fact that relatively little or no work has been done on the development of methods for their detection in the environment. The report identifies the available information and goes on to talk about ways more information on these pathogens could be collected in the future.

Disinfection practices at other offshore ocean discharges, and how they relate to mammalian impacts, may be of interest.

Practices of Other Offshore Ocean Dischargers

The Orange County Sanitation District (OCSD) discharges non-disinfected secondary treated effluent 4.5 miles offshore at a depth of 200 ft. In recent years, local beaches (e.g. Huntington Beach) have been closed due to high levels of bacteria. Studies showed that OCSD's effluent was not the cause, yet in 2002 OCSD implemented chlorine disinfection treatment as a precautionary measure. Aquatic life is sensitive to chlorination, and consequently OCSD also implemented dechlorination for the protection of marine aquatic life. Even after OCSD began their disinfection process, beach bacteria levels are still high, requiring the need for further research to identify the true source of bacterial contamination. Marine mammals were not a concern when evaluating the need for disinfection at Orange County, as there has been no cause for concern (i.e. no sick or dying marine mammals near the outfall), (pers. comm., J. Colston, OCSD, July 2006).

The City of San Diego's Point Loma Wastewater Treatment Plant discharges its primary treated (non-disinfected) effluent through a 4.5 mile long, 320 feet deep water ocean outfall. Dilution granted to the plant is 204:1 for aquatic life and 328:1 for human health. San Diego's 301(h) waiver, which exempts the facility from secondary treatment, was renewed in September 2002. One of the provisions of the waiver is comprehensive monitoring. Findings of the monitoring have been that the outfall discharge had only a limited effect of the local marine environment and the few incidences appeared related to stormwater runoff during periods of heavy rainfall and not the outfall plume, (2004 Annual Receiving Water Monitoring Report for the Point Loma Ocean Outfall, City of San Diego). Disinfection for protection of marine mammals has not been a factor when evaluating San Diego's treatment process.

The Hyperion Wastewater Treatment Plant has a 5-mile deep-water outfall with an 84:1 dilution ratio. The Hyperion Wastewater Treatment Plant does not disinfect its effluent and according to its discharge permit, monitoring results show that effluent from the outfall does not reach the shoreline and that elevated bacterial counts are associated with runoff from storm drains and discharges from piers. Based on an evaluation by the City of Los Angeles, no unreasonable degradation of the marine environment due to the effluent has been found (NPDES Permit CA 010991).

Additional Concerns

On August 3, 2006 the National Resource Defense Council (NRDC) sued the USEPA for not revising the current beachwater quality standards by October 2005, the deadline required by the Beach Act passed by Congress is 2000. NRDC claims that the standards are outdated. Additionally, NRDC claims that the number of beach closures has increased 5% from 2004 to 2005 due to heavy rainfall, increased monitoring, increased development of coastal area, and "unaddressed" sources of pollution. Due to large increases in beach closures in Los Angeles County (50%), Southern California is receiving most of the attention. As a result of the lawsuit, EPA is moving forward with developing an improved public health standard and approving faster test methods.

Summary

Based on San Francisco's record and the findings from other treatment plants that elevated bacteria levels have been attributed more so to stormwater rather than to treatment plant effluents, it appears unlikely that San Francisco will need to disinfect its dry weather discharges from the SWOO. Yet, with new beachwater quality standards in the queue to be developed, additional monitoring and/or study may be required in the future.